Design of a Model-Following Controller with Stabilized Digital Inverse System in Closed Loop

Shota Inoue, Hiroki Shibasaki, Ryo Tanaka, Takahiro Murakami, and Yoshihisa Ishida
Meiji University, School of Science and Technology, Kawasaki, Japan
Email: shota.inoue3333@gmail.com, {shiba, rtanaka, tmrkm} @meiji.ac.jp, ishida@isc.meiji.ac.jp

***Abstract*—In this paper, design of a model-following controller with stabilized digital inverse system in a closed loop is proposed. In this paper, the proposed inverse system is placed in front of the plant. Our model-following control system was developed using the above structure. However, when the relative degree of the transfer function for a continuous-time plant is greater than 3, the discrete-time system is often in the non-minimum phase. In addition, unstable zeros appear when the chosen sampling period is too short. To solve these problems, an auxiliary output is used in the design. We designed a closed-loop system to consider the robustness of the proposed controller. In addition, a parallel feedforward compensator is added in parallel with the plant**

***Index Terms*—stabilized inverse system, multi-sampling rate, model-following control, parallel feedforward compensator**

I. Introuction

In the industrial field, there are some plant inputs that cannot be used or are unknown. For example, they may be present in a complex plant or when an input signal is uncertain. Other examples include the effect of disturbances, age deterioration, saturation characteristics, trouble with equipments such as an actuator, and so on. These causes may not allow one to obtain a desired plant input.

Advanced techniques for estimating unpredictable disturbances have been proposed by some researchers, such as through the use of stabilized digital inverse systems [1]-[4]. By applying the inverse characteristic of the transfer function of the plant, reducing the influence of a disturbance is possible. The design for a stabilized digital inverse system was proposed by Kaku *et al.* [4]. They proposed a method for estimating an unknown disturbance by placing the inverse system after the plant. Kaku *et al.*'s method can be positioned at all poles so that the plant is stable even if it has a high order and is a non-minimum phase system. In particular, because of the existence of unstable limiting zeros and/or minimum phase property for continuous-time systems, there are many cases where discretized systems are in a non-minimum phase, thus, making it impossible to construct a stabilized digital inverse system by ordinary methods. To solve this problem, Kaku et al. have proposed a method of digital inverse system control designed using the observed output at a sample point and an auxiliary observed output between sample points.

On the basis of this method, we propose the design of a model-following controller using a digital inverse system to produce a stable closed-loop system. The auxiliary output adopted in the feedforward control is specifically designed for the proposed control system. First, even if the system has unstable or limited zeros when a continuous-time system is discretized, we can change the position of all zeros as required. Second, after calculating the unknown input of the plant, the inverse system is designed to operate in front of the plant. Third, we design a closed-loop system to consider the robustness of the proposed controller. In addition, a parallel feedforward compensator is added in parallel with the plant [5]-[10].

This paper is organized as follows. In Section 2, we describe a stable inverse system in the discrete-time domain. In Section 3, we describe a stable inverse system in the discrete-time domain of a closed-loop system. In section 4, the effectiveness of the method for two types of plants is confirmed by simulation results. Finally, in Section 5, we present the conclusion.

II. Design of a Model-Following Controller with Stabilized Digital Inverse System

A continuous-time plant is expressed as

$$\dot{\boldsymbol{x}}(t) = \boldsymbol{A}_c \boldsymbol{x}(t) + \boldsymbol{b}_c u(t) \tag{1a}$$

$$y(t) = \boldsymbol{c}_c \boldsymbol{x}(t) \tag{1b}$$

With $\boldsymbol{A}_c \in \mathbb{R}^{n\times n}$, $\boldsymbol{b}_c \in \mathbb{R}^{n\times 1}$, and $\boldsymbol{c}_c \in \mathbb{R}^{1\times n}$, where $\dot{\boldsymbol{x}}(t)$ is the differential of the state vector $\boldsymbol{x}(t)$, $u(t)$ is the input, and $y(t)$ is the output. The transfer function $G_p(s)$ of Equation. (1) from $u(t)$ to $y(t)$ is given by

$$G_p(s) = \boldsymbol{c}_c (s\boldsymbol{I}_n - \boldsymbol{A}_c)^{-1} \boldsymbol{b}_c \tag{2}$$

where $\boldsymbol{I}_n \in \mathbb{R}^{n\times n}$ is an identity matrix.

The discrete-time system of Equation (1) with the sampling time T can be written as

$$\boldsymbol{x}_{i+1} = \boldsymbol{A}_d \boldsymbol{x}_i + \boldsymbol{b}_d u_{pi} \tag{3a}$$

$$y_i = \boldsymbol{c}_d \boldsymbol{x}_i \tag{3b}$$

Manuscript received November 15, 2013; revised January 20, 2014.

doi: 10.12720/ijeee.2.2.134-137

where $\boldsymbol{x}_i = \boldsymbol{x}(iT)$, $y_i = y(iT)$, $\boldsymbol{A}_d = e^{\boldsymbol{A}_c T}$, and $\boldsymbol{b}_d = \boldsymbol{b}_c \int_0^T e^{\boldsymbol{A}_c h} dh$.

In the derivation of Equation (3), the input u_{pi} is assumed to be constant over the sampling interval $iT \sim (i+1)T$. It is well known that $\boldsymbol{c}_d \boldsymbol{b}_d \neq 0$ for almost all T [2]. In this case, we can derive a simple inverse system with one delay, where the plant input u_{pi} and state vector $\boldsymbol{x}_{i+1}$ are expressed as

$$u_{pi} = (\boldsymbol{c}_d \boldsymbol{b}_d)^{-1} (y_{i+1} - \boldsymbol{c}_d \boldsymbol{A}_d \boldsymbol{x}_i) \tag{4a}$$

$$\begin{aligned} \boldsymbol{x}_{i+1} = &\left[\boldsymbol{A}_d - \boldsymbol{b}_d (\boldsymbol{c}_d \boldsymbol{b}_d)^{-1} \boldsymbol{c}_d \boldsymbol{A}_d \right] \boldsymbol{x}_i \\ &+ \boldsymbol{b}_d (\boldsymbol{c}_d \boldsymbol{b}_d)^{-1} y_{i+1}. \end{aligned} \tag{4b}$$

However, the eigenvalues of $\boldsymbol{A}_d - \boldsymbol{b}_d (\boldsymbol{c}_d \boldsymbol{b}_d)^{-1} \boldsymbol{c}_d \boldsymbol{A}_d$ are composed of the n−1 zeros of the discrete-time system of Equation. (3) and zero located at the origin [11]. If the relative degree of the transfer function $G_p(s)$ is greater than 3 or the chosen sampling time T is too short, the n−1 zeros include unstable ones. To solve this problem, an auxiliary output is designed

$$z_i = y(iT + mT), \ (0 < m < 1) \tag{5}$$

That lags by mT relative to the main sampling point iT, as shown in Fig. 1. The discrete-time system for the discrete-time model is written as

$$\boldsymbol{x}_{i+1} = \boldsymbol{A}_{md} \boldsymbol{x}_i + \boldsymbol{b}_{md} u_i, \tag{6a}$$

$$y_i = \boldsymbol{c}_{md} \boldsymbol{x}_i, \tag{6b}$$

$$z_i = \boldsymbol{c}_{md} \hat{\boldsymbol{A}}_{md} \boldsymbol{x}_i + \boldsymbol{c}_{md} \hat{\boldsymbol{b}}_{md} u_i, \tag{6c}$$

$$\boldsymbol{A}_{md} = e^{\boldsymbol{A}_m T}, \boldsymbol{b}_{md} = \boldsymbol{b}_m \int_0^T e^{\boldsymbol{A}_m h} dh, \boldsymbol{c}_{md}. \tag{7}$$

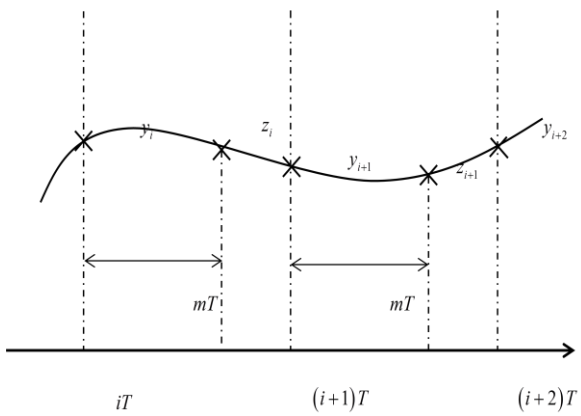

Figure 1. Multi rate sampling.

where $(\boldsymbol{A}_{md}, \boldsymbol{b}_{md})$ are constant matrices of appropriate dimensions for the discrete-time model with the sampling time T. $(\hat{\boldsymbol{A}}_{md}, \hat{\boldsymbol{b}}_{md})$ are constant matrices of appropriate dimensions for the discrete-time model with sampling time mT and can be written as

$$\hat{\boldsymbol{A}}_{md} = e^{\boldsymbol{A}_m mT}, \hat{\boldsymbol{b}}_{md} = \boldsymbol{b}_m \int_0^{mT} e^{\boldsymbol{A}_m h} dh. \tag{8}$$

$$\hat{u}_{pi} = (\boldsymbol{c}_d \hat{\boldsymbol{b}}_d)^{-1} \left[z_i - \boldsymbol{c}_d \hat{\boldsymbol{A}}_d \boldsymbol{x}_i \right]. \tag{9}$$

$$\hat{\boldsymbol{A}}_d = e^{\boldsymbol{A}_c mT}, \hat{\boldsymbol{b}}_d = \boldsymbol{b}_c \int_0^{mT} e^{\boldsymbol{A}_c h} dh. \tag{10}$$

where $(\hat{\boldsymbol{A}}_d, \hat{\boldsymbol{b}}_d)$ are constant matrices of appropriate dimensions for the discrete-time model with sampling time mT, when $\boldsymbol{c}_d \hat{\boldsymbol{b}}_d \neq 0$. In fact, the state vector $\boldsymbol{x}_i$ is estimated by an observer. Hence, Equation. (9) can be rewritten as

$$\hat{u}_{pi} = (\boldsymbol{c}_d \hat{\boldsymbol{b}}_d)^{-1} \left[z_i - \boldsymbol{c}_d \hat{\boldsymbol{A}}_d \hat{\boldsymbol{x}}_i \right] \tag{11}$$

where $\hat{\boldsymbol{x}}_i$ is an estimated state vector. Let a discrete-time state space expression for an observer be

$$\begin{aligned} \hat{\boldsymbol{x}}_{i+1} &= \boldsymbol{A}_d \hat{\boldsymbol{x}}_i + \boldsymbol{b}_d \hat{u}_{pi} + \boldsymbol{L}[y_i - \hat{y}_i] \\ &= (\boldsymbol{A}_d - \boldsymbol{L}\boldsymbol{c}_d) \hat{\boldsymbol{x}}_i + \boldsymbol{L} y_i + \boldsymbol{b}_d \hat{u}_{pi} \end{aligned} \tag{12a}$$

$$\hat{y}_i = \boldsymbol{c}_d \hat{\boldsymbol{x}}_i. \tag{12b}$$

where $\boldsymbol{L} \in \mathbb{R}^{n \times 1}$ is observer gain solved by linear quadratic regulator, and $\hat{y}_i$ is estimated observer output. By substituting Equation (11) into Equation (12a), we obtain the following equation and Fig. 2:

$$\begin{aligned} \hat{\boldsymbol{x}}_{i+1} &= (\boldsymbol{A}_d - \boldsymbol{L}\boldsymbol{c}_d) \hat{\boldsymbol{x}}_i + \boldsymbol{L} y_i \\ &\quad + \boldsymbol{b}_d (\boldsymbol{c}_d \hat{\boldsymbol{b}}_d)^{-1} \left[z_i - \boldsymbol{c}_d \hat{\boldsymbol{A}}_d \boldsymbol{x}_i \right] \\ &= \left[\boldsymbol{A}_d - \boldsymbol{b}_d (\boldsymbol{c}_d \hat{\boldsymbol{b}}_d)^{-1} \boldsymbol{c}_d \hat{\boldsymbol{A}}_d - \boldsymbol{L}\boldsymbol{c}_d \right] \hat{\boldsymbol{x}}_i \\ &\quad + \boldsymbol{L} y_i + \boldsymbol{b}_d (\boldsymbol{c}_d \hat{\boldsymbol{b}}_d)^{-1} z_i. \end{aligned} \tag{13}$$

The inverse system of Equations (11) and (13) may be stabilized despite the non-minimum phase properties of the discrete-time system. We design a model-following controller on the basis of the digital inverse system discussed in this section. In this controller, y_i and z_i are known inputs, and the plant input $\hat{u}_{pi}$ is an estimated inverse system output.

III. Design of a Model-Following Controller with Stabilized Digital Inverse System in a Closed Loop

To consider its robustness, we design a closed-loop system. We reconfigure the model transfer function so that a closed-loop transfer function corresponds to the model transfer function. Therefore, the transfer function of the model $G_m(s)$ is given by

$$\frac{G_m(s)}{1 + G_m(s)} = \frac{\omega_n^2}{s^2 + 2\zeta\omega_n s + \omega_n^2} \tag{14}$$

$$G_m(s) = \frac{\omega_n^{\ 2}}{s^2 + 2\zeta\omega_n s} \tag{15}$$

where ζ and ω_n are arbitrary constants.

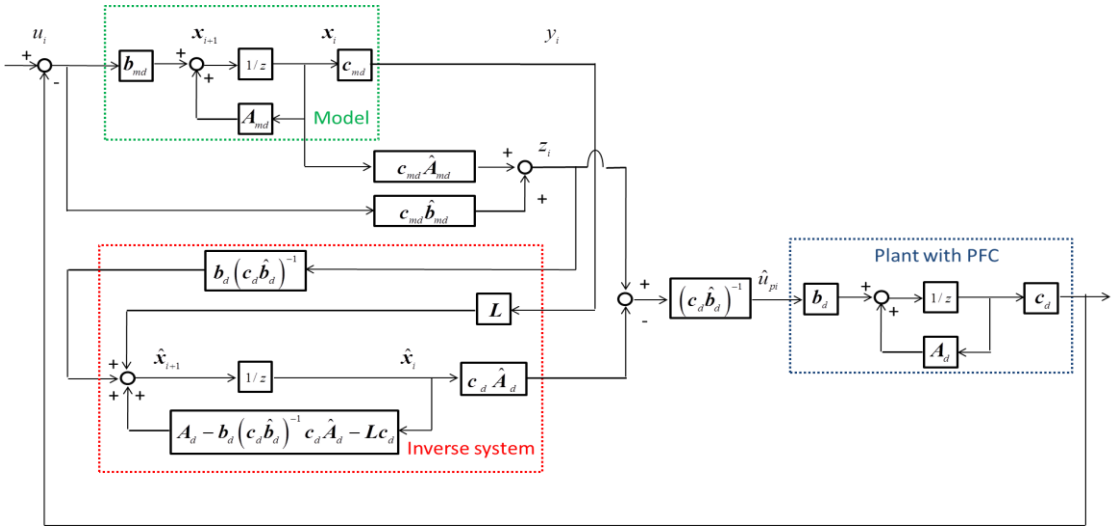

Figure 2. Block diagram of proposed method.

IV. Simulation Results

In this section, the effectiveness of the proposed method is shown in simulations. An input is assumed as a step signal. A unit step set point is introduced at time $T = 0\,[s]$. We consider two types of plants. They are discretized by the zero-order hold at the sampling time $T = 30$ [ms], and we design the inverse system for continuous-time plants defined in Equation (1) when $m = 0.5$. The continuous-time zeros and the discrete-time zeros are defined to be the roots of

$$\boldsymbol{c}_c Adj\left(s\boldsymbol{I}_n - \boldsymbol{A}_c\right)\boldsymbol{b}_c = 0, \tag{16a}$$

$$\boldsymbol{c}_d Adj\left(z\boldsymbol{I}_n - \boldsymbol{A}_d\right)\boldsymbol{b}_d = 0. \tag{16b}$$

The equation (15) is the transfer function of the model. Damping coefficient is $\zeta = 1.0$. Natural angular frequency is $\omega = 10.0$.

A. Case 1

$$G_{p1}(s) = \frac{s+1}{s^2 + 2s + 2} \tag{17}$$

In this case, the continuous-time zero is -1 and discrete-time zero is 0.9704. Therefore, the continuous-time system and discrete-time system have minimum phase properties.

The result of Case 1 is shown in Fig. 3

B. Case 2

$$G_{p2}(s) = \frac{1}{s^3 + 6s^2 + 11s + 6}. \tag{18}$$

In this case, there is no continuous-time zero and the discrete-time zeros are -3.5683 and -0.2561. Therefore, the continuous-time system has a minimum phase property but the discrete-time system has a non-minimum phase property.

The result of Case 2 is shown in Fig. 4. Thus, from Fig. 3 and Fig. 4 we show that the plant output follows the model output.

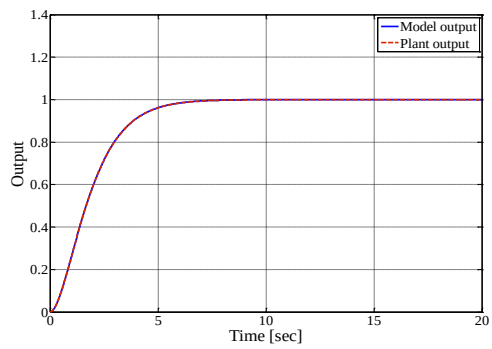

Figure 3. Result for case 1.

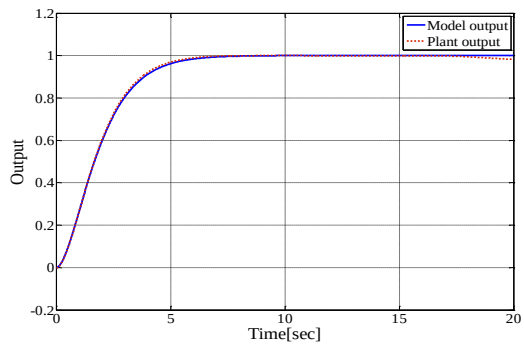

Figure 4. Result for case 2.

V. Conclusions

In this paper, we proposed to design a model-following controller with stabilized digital inverse system in a closed loop. The inverse system is placed in front of the plant. In addition, an auxiliary observation inter-sample

output is adopted to stabilize the inverse system. Furthermore, the transfer function of the model is reconstructed so that the closed-loop transfer function corresponds to the model transfer function. In addition, a parallel feed-forward compensator is added in parallel with the plant. The effectiveness of the proposed method has been confirmed by simulation results in Section 4.

REFERENCES

[1] S. S. Godbole and C. Smith, "A new control approach using the inverse system," *IEEE Trans. Automat. Control*, vol. 17, pp. 698-702, Oct. 1972.

[2] T. Mita, B. C. Pang, and K. Z. Liu, "Design of optimal strongly stable digital control systems and application to output feedback control of mechanical systems," *Internat. J. Control*, vol. 45, pp. 2071-2082, 1987.

[3] Y. Kaku, H. Numasato, and T. Mita, "Stabilized digital inverse system and its application to motor control," in *Proc. IEEE Internat. Symp. on Intell. Control*, Sep. 1989, pp. 180-185.

[4] Y. Kaku, H. Mikami, and T. Mita, "Design of stabilized digital inverse systems," *Systems & Control Letters*, vol. 11, pp. 123-127, Mar. 1988.

[5] N. Tsukamoto and S. Yokota, "Two-degree-of freedom control including parallel feedforward compensator (The effects on the control of six-link electro-hydraulic serial manipulator)," *Trans. Japan Fluid Power System Society*, vol. 34, no. 6, pp. 126-133, 2004.

[6] Z. Iwai, I. Mizumoto, and M. Deng, "A parallel feedforward compensator virtually realizing almost strictly positive real plant," in *Proc. IEEE Decision and Control*, vol. 3, 1994, pp. 2827-2832.

[7] Z. Iwai and I. Mizumoto, "Realization of simple adaptive control by using parallel feedforward compensator," *Int. J. Control*, vol. 59, no. 6, pp. 1543-1565, 1994.

[8] I. Bar-Kana, "Parallel feedforward and simplified adaptive control," *Int. J. Adaptive Control and Signal Process*, vol. 1, pp. 95-109, 1987.

[9] Z. Iwai, I. Mizumoto, and Y. Nakashima, "Multivariable stable PID controller design with parallel feedforward compensator," in *Proc. Int. Joint Conf. SICE-ICASE*, 2006, pp. 3246-3251.

[10] H. Kaufman, I. Bar-Kana, and K. Sobei, "Direct adaptive control algorithms: Theory and applications," *Springer-Verlag*, 1994.

[11] S. Levy and R. Sivan, "On the stability of a zero-output systems," *IEEE Trans. Automat. Control*, vol. 11, pp. 315-316, 1966.

S. Inoue was born in July 1991 in Ibaraki, JAPAN. He is currently studying for the B. E. degree at Undergraduate School of Science and Technology, Meiji University. His research interests include digital control and its applications.

H. Shibasaki was born in Nov. 1988 in Tokyo, JAPAN. He received the B. E. degree in Electronics and Bioinformatics in 2011 and the M. E. degree in Electrical Engineering in 2013 from Meiji University, Kawasaki, Japan,. He is currently studying toward the Dr. Eng. degree in Graduate School of Science and Technology, Meiji University. His research interests include continuous and digital control for a plant with integrator, and an unstable plant and its industrial application. He is a student member of the IEEE, and the IEEJ of Japan.

R. Tanaka was born in Oct. 1987 in Fukuoka, JAPAN. He received the B.E., and M.E. degrees in Electrical Engineering from Meiji University, Japan, in 2010, and 2012, respectively. He is currently studying toward the Dr. Eng. degree in Graduate School of Science and Technology, Meiji University. His research interests include digital signal processing and its applications. He is a student member of the IEEE.

R. Murakami received the B.E., M.E., and D.E. degrees in Electrical Engineering from Meiji University, Japan, in 2000, 2002, and 2005, respectively. From Apr. 2005 to Mar. 2006, he worked as a Research Assistant at the Department of Electrical Engineering, Meiji University. From Apr. 2006 to Mar. 2009, he was a Research Fellow of Japan Society for the Promotion of Science (JSPS). From Apr. 2009 to Mar. 2012, he worked as an Assistant Professor at the Department of Monozukuri Engineering, Tokyo Metropolitan College of Industrial Technology. In Apr. 2012, he joined the Department of Electronics and Bioinformatics, Meiji University, where he is currently an Assistant Professor/Lecturer. His research interests include speech signal processing, blind signal processing, and digital signal processing. He is a member of IEICE and the Acoustical Society of Japan.

Y. Ishida was born in Feb. 1947 in Tokyo, JAPAN. He received the B. E., M. E., and Dr. Eng. Degrees in Electrical Engineering, Meiji University, Kawasaki, Japan, in 1970, 1972, and 1978, respectively. In 1975 he joined the Department of Electrical Engineering, Meiji University, as a research Assistant and became a Lecturer and an Associate Professor in 1978 and 1981, respectively. He is currently a Professor at the Department of Electronics and Bioinformatics, Meiji University. His current research interests include signal processing, speech analysis and recognition, and digital control. He is a member of the IEEE, and the IEICE of Japan.