PSO and Cuckoo Based PI Control of Positive Output Re-Lift Luo Converter

E. Kalaiarasi and J. Velmurugan
Department of EEE, PSNA College of Engineering and Technology, Dindigul, India
Email: kalaiarasielango@psnacet.edu.in

***Abstract*—Positive output re-lift Luo converter is a recently developed DC-DC converter which performs the conversion from positive source voltage to positive load voltage and are used in computer peripherals, dc drives, industries and other high voltage projects. Voltage lifting technique is employed and hence the output voltage increases in an arithmetic progression unlike classical boost converter. This paper presents the closed loop control of positive output re-lift Luo converter with Proportional-Integral controller. PI controller is capable of providing good static and dynamic performances and can be used to analyze the system performance under disturbances. Using state space averaging technique dynamic equations can be derived and converter is modeled. Control algorithm such as Cuckoo and Particle Swarm Optimization are implemented to track output voltage with respect to the reference voltage. These optimization techniques reject the system disturbances at line and load side, hence steady state can be reached with less overshoot and settling time. The simulation model of the proposed converter is implemented in Matlab/Simulink and Cuckoo technique is compared over PSO.**

***Index Terms*—cuckoo algorithm, positive output re-lift luo converter, proportional-integral (PI) control**

I. Introduction

DC-DC conversion technology has been developing very rapidly, and DC-DC converters have been widely used in industrial applications such as dc motor drives, computer systems and communication equipments. The output voltage of pulse width modulation (PWM) based DC-DC converters can be changed by changing the duty cycle.

The positive output re-lift Luo converter is a new series of DC-DC converters possessing high-voltage transfer gain, high power density; high efficiency, reduced ripple voltage and current [4]. These converters are widely used in computer peripheral equipment, industrial applications and switch mode power supply, especially for high voltage-voltage projects [1]-[2]. Control for them needs to be studied for the future application of these good topologies.

The voltage-lift technique has become a popular method that is widely applied in electronics. With effective use, this technique can produce high voltage gains and reduce the losses due to parasitic elements. Voltage-lift is the name for a technique that produces an output voltage increasing in an arithmetic progression, stage by stage. This means that as each additional stage is added on, the gain is incremented by 1. Due to the time variations and switching nature of the power converters, their static and dynamic behavior becomes highly non-linear. In general, a good control for DC-DC converters always ensures in arbitrary operating condition. Moreover, good response in terms of rejection of load variations, input voltage variations and even. The static and dynamic characteristics of these converters have been well discussed in the literature [5]. With different state-space averaging techniques, a small-signal state-space equation of the converter system could be derived. The proportional integral derivative (PID) controller's recent tuning methods and design to specification has been well reported in the literature [6]-[7]. The PI control technique offers several advantages compared to PID control methods: stability, even for large line and load variations, reduce the steady state error, robustness, good dynamic response and simple implementation.

In this paper, state-space model for positive output re-lift Luo converter (PORLLC) are derived at first. A PI control with zero steady state error and fast response is brought forward. The static and dynamic performance of PI control for positive output re-lift Luo converter is studied in Matlab/Simulink. Details on operation, analysis, control strategy and simulation results for positive output elementary re-lift Luo converter (PORLLC) are presented in the subsequent sections.

The basic Cuckoo Search (CS) Optimization algorithm is used and is primarily based on the natural obligate brood parasitic behavior of some cuckoo species in combination with the Levy flight behavior of some birds and fruit flies. In this paper cuckoo technique is also compared with particle swarm optimization (PSO) which deals with the movement of particles in search space randomly similar to flocking of birds. Their performances are compared in the frequent sections

II. Operation and Modeling of Positive Output Re-lift Luo Converter

For the purpose of optimizing the stability of positive output re-lift Luo converter dynamics, while ensuring correct operation in any working condition, a PI control is a more feasible approach. The main advantage of PI

Manuscript received September 26, 2016; revised April 20, 2017.

doi: 10.18178/ijeee.5.4.274-279

control scheme is its ability to control system parameters under variations. K_p and K_i values are derived for its proper tuning.

A. Circuit Description and Operation:

The positive output re-lift Luo converter is shown in Fig. 1. It consists of two static switches S and S_1 ; three diodes D, D_1, and D_2; three inductors L_1, L_2 and L_3; four capacitors C, C_1, C_2, and C_O. The lift circuit consists of D_1 -C_1 -L3 D2 -S_1 -C_2. Capacitors C1 and C_2 perform characteristics to lift the capacitor voltage V_C by twice the source voltage V_I. L_3 performs the function as a ladder joint to link the two capacitors C_1 and C_2 and lift the capacitor voltage V_C up.

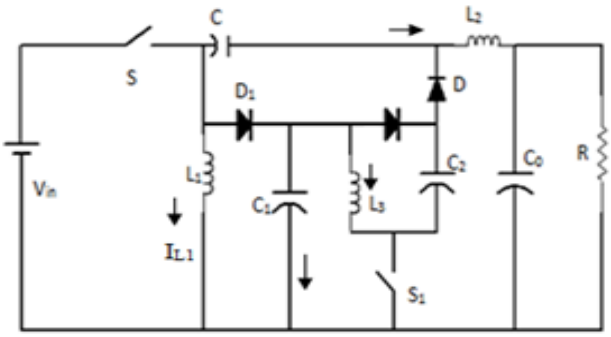

Figure 1. Re-Lift Luo converter circuit

When switches S and S_1 turn on, the source instantaneous current $i_1 = i_{L1}+i_{L2}+i_{C1}+i_{L3}+i_{C2}$ and is shown in Fig. 1. Inductors L_1 and L_3 absorb energy from the source. In the mean time inductor L2 absorbs energy from source and capacitor C. Three currents i_{L1}, i_{L3} and i_{L2} increase. When switches Sand S1turn off, source current i_1 =0. Current i_{L1} flow through capacitor C1, inductor L3, capacitor C_2 and diode D to charge capacitor C. Inductor L_1 transfers its stored energy to capacitor C. In the meantime, current i_{L2} flows through the (C_0–R) circuit, capacitor C_1, inductor L_3, capacitor C2 and diode D to keep itself continuous. Both currents i_{L1} and i_{L2} decrease.

In order to analyze the circuit working procession, the equivalent circuits in switch-on and -off states are shown in Fig. 2 and Fig. 3.

Assuming capacitor C_1 and C2 are sufficiently large, and the voltages V_{C1} and V_{C2} across them are equal to VI in steady state. Re-lift circuit consists of pump and filter circuit. Inductor stores its energy during turn on period.

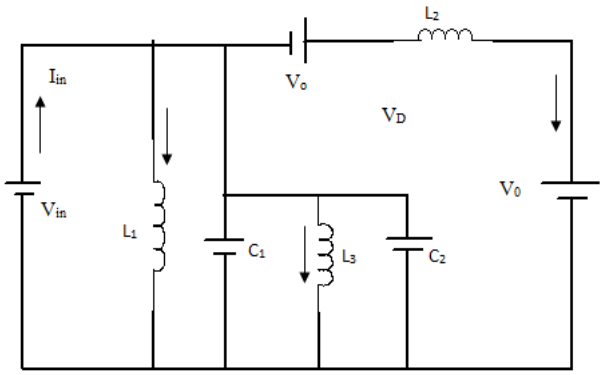

Figure 2. Equivalent circuit when switches on

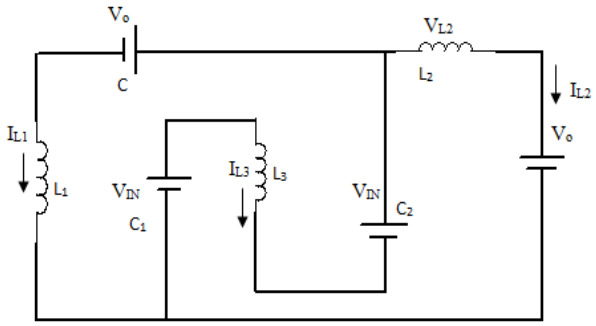

Figure 3. Equivalent circuit when switches-off

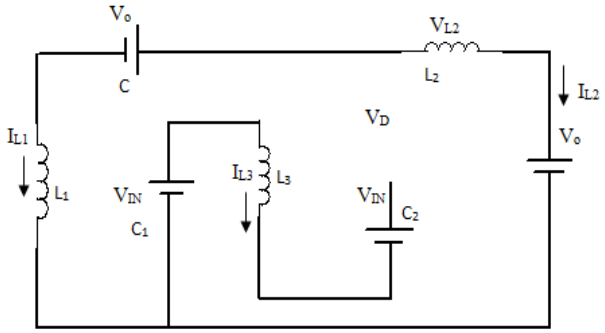

Figure 4. Discontinuos mode

Current flows through inductor gets decreased and there is no continuos flow of current to charge capacitor C. Diode D is not conducting i.e. there is no current flow through diode during discontinuos mode (Fig. 4). Here the Switch S in these diagrams is a P-channel power MOSFET device (PMOS), and S1 is an N-channel MOSFET. They are driven by PWM signal.

Voltage v_{L3} is equal to V_1 during switch-on. The peak to peak variation of current i_{L3} is

$$\Delta i_{L3}=V_1kT/L_3 \quad (1)$$

This variation is equal to the current reduction when it is switched-off. Suppose its $-V_{L3off}$, so

$$\Delta i_{L3}=V_{L3\text{-}off}(1\text{-}k)T/L_3 \quad (2)$$

Thus during switch-off the voltage across the inductor L_3 is,

$$V_{L3\text{-}off}=k/(1\text{-}k) \quad (3)$$

Current i_{L1} increases in switch-on period kT, and decreases in switch-off period (1-k)T. The corresponding voltages applied across L_1 are V_1 and $-(V_c\text{-}2V_1\text{-}V_{L3\text{-}off})$. Therefore,

$$kTV_1= (1\text{-}k)\ T\ (V_c\text{-}2V_1\text{-}V_{L3\text{-}off}) \quad (4)$$

Hence,

$$V_c=2/\ (1\text{-}k)*V_1 \quad (5)$$

Current i_{L3} increases in switch-on period kT, and it decreases in switch-off period (1-k)T. The corresponding voltages applied across L_2 are $(V_1+V_c\text{-}V_0)$ and $-(V_0\text{-}2V_1\text{-}V_{L3\text{-}off})$. Therefore,

$$kT(V_c+V_1\text{-}V_0)=(1\text{-}k)(V_0\text{-}2V_1\text{-}V_{L3\text{-}off}) \quad (7)$$

Hence,

$$V_0=2/(1\text{-}k)*V_1 \quad (8)$$

And the output current is,

$$I_0=(1-k)/2*I_1 \quad (9)$$

The voltage transfer gain in continuos mode is

$$M_R=V_0/V_1=2/(1-k)$$

B. State Space Modeling of Re-Lift Luo Converter

To study the behavior of any system, modeling and simulation are very essential. State-space analysis is a popular and useful approach for modeling any non-linear and time variant system

The state model of a system consists of the state equation $\dot{X} = AX(t) + BU(t)$ and output equation $Y = CX(t) + DU(t)$.

where,

X(t)- State vector of order n x 1
U(t)- Input vector of order m x 1
Y- Output vector of order p x 1
A- System matrix of order n x n
B- Input matrix of order n x m
C- Output matrix of order p x n
D- Transmission matrix of order p x m

The fundamental step in modeling is the replacement of the state-space description of the modes of the converters by their average over the total period T which results in a single continuous state-space equation.

Any Luo converter operating in the continuous conduction mode can be described by the state-space equations of the two modes mentioned below:

During interval dT (switch – on period / mode 1)

$$\dot{X}_1 = A_1X + B_1U$$
$$Y_1 = C_1X$$

And during interval (1-d)T (switch-off period / mode 2)

$$\dot{X}_1 = A_2X + B_2U$$
$$Y_2 = C_2X$$

With usual notations, the state-space averaged description over the total period T is

$$\dot{X} = (dA_1 + (1-d)A_2)X + (dB_1 + (1-d)B_2)U$$
$$Y = (dC_1 + (1-d)C_2)X$$

The state variables are assumed to be

$X_1=i_{L1}$, $X_2=V_{C1}$, $X_3=V_{C2}$, $X_4=i_{L2}$, $X_5=V_C=V_{C3}$, $X_6=V_{C0}=V_{C4}$, $U=V_1$, $Y=V_0$

Using the equivalent circuit for the switch – on period of the chosen circuit as in Fig. 2. The state space model 1 is

$$A_1 = \begin{bmatrix} 0 & 0 & 0 & 0 & 0 & 0 \\ \frac{1}{C_1} & 0 & 0 & 0 & 0 & 0 \\ 0 & 0 & 0 & 0 & 0 & 0 \\ 0 & 0 & \frac{1}{L_2} & 0 & 0 & 0 \\ 0 & 0 & 0 & \frac{1}{C_3} & -\frac{C_1}{C_3} & 0 \\ 0 & 0 & 0 & 0 & \frac{1}{RC_4} & 0 \end{bmatrix}$$

$$B_1 = \begin{bmatrix} \frac{1}{L_1} \\ -\frac{1}{C_1} \\ 0 \\ 0 \\ 0 \\ 0 \end{bmatrix} \quad D_1 = [0] \quad C_1 = [0 \quad 0 \quad 0 \quad 0 \quad 0 \quad 1]$$

Using the equivalent circuit for the switch-off period of the circuit as in Fig. 3, the state model for mode 2 is

$$A_2 = \begin{bmatrix} 0 & -\frac{1}{L_1} & -\frac{1}{L_1} & 0 & 0 & 0 \\ \frac{1}{C_1} & 0 & 0 & 0 & 0 & 0 \\ 0 & 0 & -\frac{C_1}{C_2} & \frac{1}{C_2} & 0 & 0 \\ 0 & 0 & -\frac{1}{L_2} & 0 & \frac{1}{L_2} & -\frac{1}{L_2} \\ 0 & 0 & 0 & \frac{1}{C_3} & 0 & 0 \\ 0 & 0 & 0 & 0 & 0 & \frac{C_4 - RC_3}{C_4} \end{bmatrix}$$

$$B_2 = \begin{bmatrix} \frac{1}{L_1} \\ 0 \\ 0 \\ 0 \\ 0 \\ 0 \end{bmatrix} \quad D_2 = [0] \quad C_2 = [0 \quad 0 \quad 0 \quad 0 \quad 0 \quad 1]$$

III. Design of PI Controller

PI controller is a well-known controller which is used in most application. PI controller becomes a most popular industrial controller due to its simplicity. Error in output voltage and change in duty cycle of the power switch is respectively the input and output of the PI control. Parameters k_p and k_i are obtained by finding minimum values of integral of time of square of error (ISE).

In proportional control,

$$P(t) = K_p e(t)$$

Proportional action-p(t), where the signal is proportional to the error signal at the present moment.

In Integral control,

$$i(t) = K_i \int_0^t e(t)dt$$

Integral action, i(t), where the signal is proportional to the commutative values of the error signal up to the present moment.

where K_p, K_i are constants.

The overall control action, m(t), can be expressed as:

$$m(t) K_p e(t) + K_i \int_0^t e(t)dt$$

As K_p is increased, the system speed increases (with a tendency to overshoot), and the steady state error decreases, but is not eliminated. As K_i is increased, the steady-state error goes to zero and the system tends towards instability. Integral control is also never used alone.

A. Cuckoo Search Optimization

In cuckoo search algorithm cuckoo egg represents a potential solution to the design problem which has a fitness value. The algorithm uses three idealized rules. These are:

a) Each cuckoo lays one egg at a time and dumps it in a randomly selected nest.

b) The best nest with high quality eggs will be carried over to the next generation.

c) The number of available host nests is fixed and a host bird can discover an alien egg with a probability of P_a [0, 1]. In this case, the host bird can either throw the egg away or abandon the nest to build a completely new nest in a new location. Initially, a population of *n* eggs, each a potential solution to the problem under consideration is selected. Then, *n* solution vector of $x=x_1...x_{ng}^t$ is generated with *ng* variables. For each solution vector, the value of objective function f(x) is calculated. For cuckoo *i*, the algorithm generates a new solution $x_i^{v+1}=x_i^v+\beta\lambda$, where x_i^{v+1} and x_i^v are the previous and new solutions.

The step size is selected as $\beta>1$ according to the problem. λ is the step size which is determined according to random walk with Levy flights. This behavior has been applied to optimization and optimal search. When generating new solutions for a cuckoo, a Levy flight is performed.

The pseudo code for CS algorithm is:

Start
Objective function f(x), $x= (x_1, x_2 \ldots x_n)^T$
Generate initial population of *n* host nests x_i (i=1, 2…n)
While (t<MaxGenerations) or (stop criterion)
Move a cuckoo randomly via Levy flights
Evaluate its fitness F_i
Randomly choose nest among *n* available nests (for example j)
If ($F_i>F_j$) Replace j by the new solution;
Fraction P_a of worse nests is abandoned and new nests are being built;
Keep the best solutions or nests with quality solutions;
Rank the solutions and find the current best
End while
Post process and visualize results
End

B. Particle Swarm Optimization

PSO is a general purpose optimization algorithm of which the underlying idea is the following: a swarm of particles moves around in the search space and the movements of the individual particles are influenced by the improvements discovered by the others in the swarm. The algorithm is initialized with particles at random positions, and then it explores the search space to find better solutions. In every iteration, each particle adjusts its velocity to follow two best solutions. The first is the cognitive part, where the particle follows its own best solution found so far. This is the solution that produces the lowest cost (has the highest fitness). This value is called p Best (particle best). The other best value is the current best solution of the swarm, i.e., the best solution by any particle in the swarm. This value is called g Best (global best). Then, each particle adjusts its velocity and position with the following equations:

$$v' = v + c1.r1.(p\ Best - x) + c2.r2.(g\ Best - x)$$

$$x' = x + v'$$

where v is the current velocity, v' the new velocity, x the current position, x' the new position, p Best and g Best as stated above, r1 and r2 are even distributed random numbers in the interval [0, 1], and c1 and c2 are acceleration coefficients. Where c1 is the factor that influences the cognitive behaviour, i.e., how much the particle will follow its own best solution, and c2 is the factor for social behaviour, i.e., how much the particle will follow the swarm's best solution.

The algorithm can be written as follows:

1) Initialize each particle with a random velocity and random position.

2) Calculate the cost for each particle. If the current cost is lower than the best value so far, remember this position (p Best).

3) Choose the particle with the lowest cost of all particles. The position of this particle is gBest.

4) Calculate, for each particle, the new velocity and position according to the above equations. Repeat steps 2-4 until maximum iteration or minimum error criteria is not attained.

IV. Simulation Study

The simulation results for Positive output re-lift Luo converter using PI controller tuned with soft computing techniques such as Cuckoo Search and Particle Swarm Optimization have been presented. K_p and K_i values are taken as 5.1386 and 0.00546 for Cuckoo and for PSO 0.0523 and 0187 respectively. K_p is proportional to the present error and K_i is equal to the past error. It seems that K_p is always higher than the integral term. Output voltage and current are analysed under the reference value of 12V. Parameters of re-lift Luo converter are presented in Table I.

TABLE I. Parameters of Re-Lift Luo Converter

Parameters	Value
Input Voltage	12V
Output Voltage	60V
Inductors	100 μH
Capacitors	5 μF
Range of Duty cycle	0.3 to 0.9

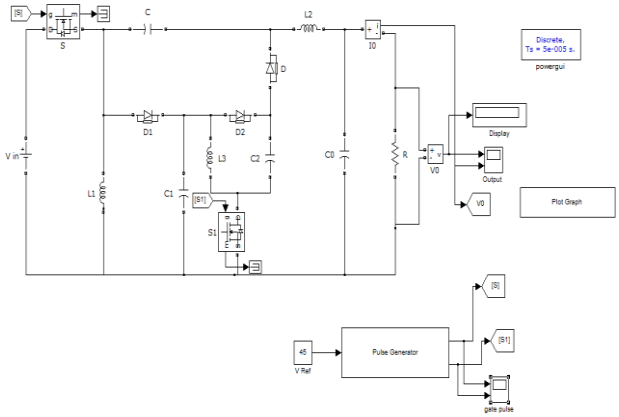

Figure 5. Simulation model for re-lift Luo converter

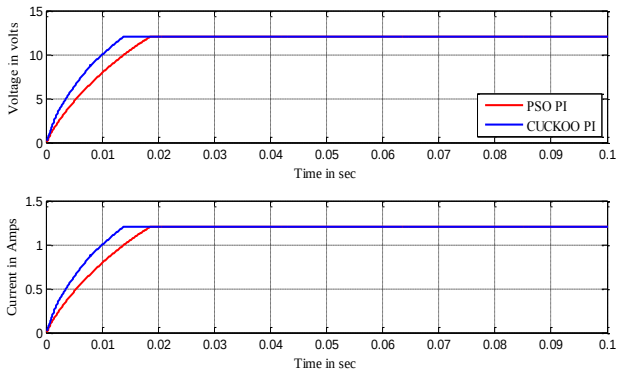

Figure 6. Simulated output voltage and current waveform under V_{ref} =12

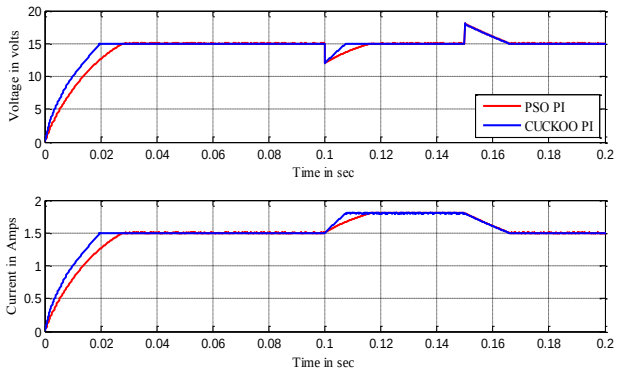

Figure 7. Simulated output voltage and current waveform with line disturbance at 0.1 sec with 10% decrement and 0.15 sec with 25% increment

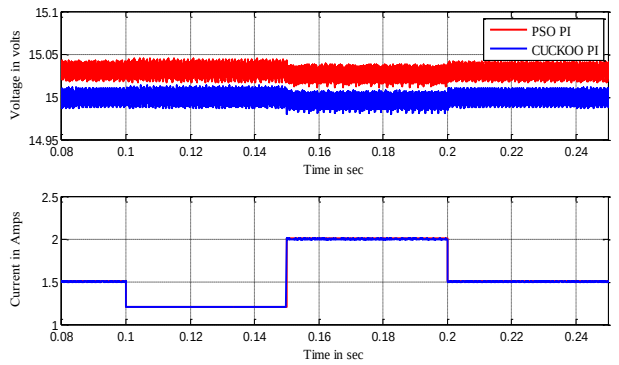

Figure 8. Simulated output voltage and current waveform load disturbance at 0.1sec with 25%increment and with 10% decrement at 0.15sec

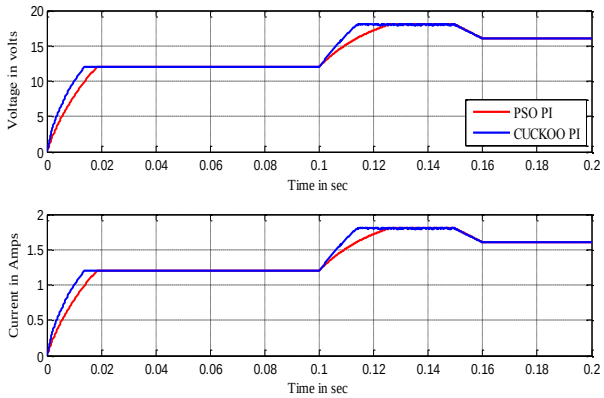

Figure 9. Simulated output voltage and current waveform with set point tracking of 18 V at 0.1 sec and 15V at 0.15 sec.

From the above simulated waveforms from Fig. 5-Fig. 9, it is seen that re-lift Luo converter performs higher voltage conversion with smooth dc output unlike boost converters. By means of PI controller with soft computing techniques steady state can be achieved with less overshoot and cuckoo based technique possess best response over PSO.

V. Conclusion

Due to the time variations and switching nature of power converters, their dynamic behavior becomes highly non-linear. This work has successfully demonstrated the design, analysis and suitability of PI controlled positive output re-lift Luo converter. The simulation based performance analysis has been presented along with its state space model. PI controller with soft computing techniques such as cuckoo and PSO has proved to be robust and suited for line and load disturbances. Among the soft computing techniques used it is seen that cuckoo possess best result. Thus positive output re-lift Luo converter with PI controller claims its use in applications such as computer peripheral equipment, switch mode power supply, medical equipment and industrial applications especially for high voltage projects etc.

References

[1] F. L. Luo and H. Ye, "Positive output super-lift converters," *IEEE Transaction on Power Electronics*, vol. 18, no. 1, pp. 105-113, Jan. 2003.

[2] F. L. Luo, "Luo converters-voltage-lift technique," in *Proc. IEEE Power Electronics Special Conference IEEE-PESC'98*, Fukuoka, Japan, May 1998, pp. 1783-1789.

[3] S. Kumar and A. Sekar, "Performance evaluation of conventional controller for positive output re-lift Luo converter," *IJIRCCE*, vol. 2, no. 1, Jan. 2014.

[4] L. B. Sree and T. S. Saravanan, "Characterization and modeling of SiC based positive output super-lift Luo converter," *International Journal of Computer Applications*, vol. 60, pp. 13-19, Mar. 2013.

[5] F. L. Luo, "Luo converters-voltage lift technique (negative output)," in *Proc. Second World Energy System International Conference WES'98*, Tornoto, Canada, May 1998, pp. 253-260.

[6] F. L. Luo, "Re-Lift converter: Design, test, simulation and stability analysis," *IEE Proc. Electr. Power Appl.*, vol. 145, no. 4, pp. 315-325, 1998.

[7] R. Middlebrook and S. Cuk, "A general unified approach to modeling switching-converter power stages," *International Journal of Electronics*, vol. 42, no. 6, pp. 521-550, Jun. 1977.

[8] P. Comines and N. Munro, "PID controllers: Recent tuning methods and design to specification," *IEEE Proc. Control Theory Application*, vol. 149, no. 1, pp. 46-53, Jan. 2002.

[9] P. Mattavelli, L. Rossetto, and G. Spiazzi, "Small signal analysis of DC-DC converter with sliding mode control," *IEEE Transaction on Power Electronics*, vol. 12, no. 1, pp. 96-102, Jan. 1997.

[10] Y. Panov, J. Rajagopalan, and F. C. Lee, "Analysis and control design of N paralleled DC-DC converters with master-slave current sharing control," in *Proc. Applied Power Electronics Conference*, 1997, pp. 436-442.